330C L

Hydraulic Excavator

Engine		
Engine Model	CAT® C9	
Flywheel Power	184 kW	247 hp
Operating Weight	35 100 kg	77,400 lb

JC Machinery SUNIGHT
excavatorhunter.com

Engine and Hydraulics

✔ New to the 330C L, the Cat C9 engine combines with proven hydraulics to give the 330C L consistently high power and control in the field. **pg. 4**

Structures

Rugged Caterpillar undercarriage design and proven structural manufacturing techniques assure outstanding durability in the toughest applications. **pg. 5**

Booms and Sticks

Built for good performance and long service life, Caterpillar® booms and sticks are large, welded, box-section structures with thick, multi-plate fabrications to resist high stress. Caterpillar offers various front combinations to meet various demands. **pg. 6**

Complete Customer Support

Your Cat dealer offers a wide range of services that can be set up under a customer support agreement when you purchase your equipment. The dealer will help you choose a plan that can cover everything from machine and attachment selection to replacement. **pg. 11**

Increased work tool options, improved cycle times, and ease of operation lead to increased productivity and lower operating costs.

JC Machinery SUNIGHT
excavatorhunter.com

Operator Station

✔ The 330C L operator work station is quiet with ergonomic control placement and convenient adjustments, low lever and pedal effort, ergonomic seat design and highly efficient ventilation. **pg. 7**

Work Tools – Attachments

✔ The Tool Control System of the 330C L allows the hydraulic system to effectively handle hydromechanical tools. Tool settings can be programmed and selected from the monitor. **pg. 8**

Serviceability

Longer service intervals and easier maintenance results in better machine availability and lower owning and operating costs. **pg. 10**

JC Machinery SUNIGHT
excavatorhunter.com

✔ *New Feature*

Engine and Hydraulics

Cat C9 engine and hydraulics give the 330C L exceptional power, efficiency and controllability unmatched in the industry for consistently high performance in all applications.

Engine. Six cylinder turbocharged engine built for power, reliability, economy and low emissions will keep the machine up and running.

Automatic Engine Speed Control. The two-stage, one-touch control maximizes fuel efficiency and reduces sound levels.

Low Sound, Low Vibration. The C9 design improves operator comfort by reducing sound and vibration.

HEUI™ Fuel System. The HEUI™ fuel system provides improved emissions to meet EPA Tier 2 regulations and lower fuel consumption.

Hydraulic Cross Sensing System. Improves productivity with faster implement speeds and quicker, stronger pivot turns.

Fine Swing Control. Fine swing control cushions swing start and stop for better implement control.

Hydraulic Cylinder Snubbers. The hydraulic cylinder snubbers at the rod-end of the boom cylinders and both ends of the stick cylinders cushion shocks and increases cylinder life, keeping the machine working longer.

Controllability. The hydraulic system offers precise control to the 330C L, reducing operator fatigue, improving operator effectiveness and efficiency, which ultimately translates into enhanced performance.

Boom and Stick Regeneration Circuit. Boom and stick regeneration circuit increases efficiency and reduces cycle times for higher productivity and lower operating costs.

JC Machinery SUNIGHT
excavatorhunter.com

Structures

330C L structural components and undercarriage are the backbone of the machine's durability.

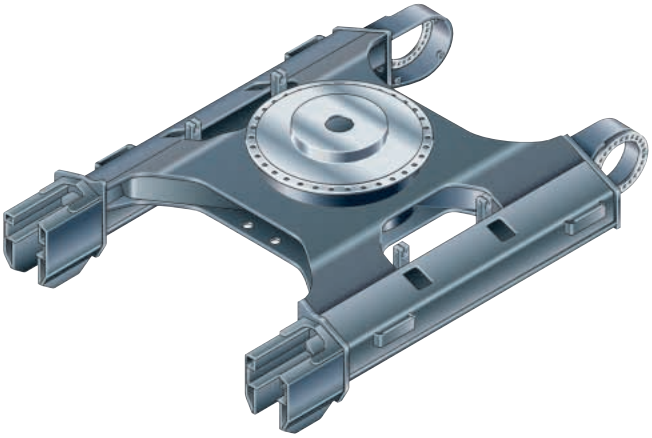

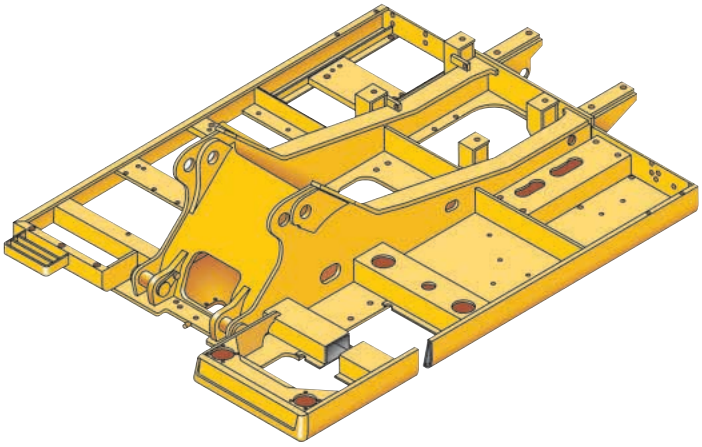

Robotic Welding. Up to 95% of the structural welds on a Caterpillar Excavator are completed by robots. Robotic welds achieve up to three times the penetration of manual welds.

Carbody Design and Track Roller Frames. X-shaped, box-section carbody provides excellent resistance to torsional bending. Robot-welded track roller frames are press-formed, pentagonal units to deliver exceptional strength and service life.

Main Frame. Rugged main frame is designed for maximum durability and efficient use of materials.

Undercarriage. Durable Cat undercarriage absorbs stresses and provides excellent stability.

Rollers and Idlers. Sealed and lubricated carrier rollers, idlers, and heavy duty track rollers provide excellent service life, to keep the machine in the field longer.

Grease Lubricated Track. The Grease Lubricated Track provides long track pin and bushing wear, and quiet travel.

Long Undercarriage. The long (L) undercarriage maximizes stability and lift capacity. This long, wide and sturdy undercarriage offers a very stable work platform.

JC Machinery SUNIGHT
excavatorhunter.com

Booms and Sticks

Built for performance and long service life, Caterpillar booms and sticks are large, welded, box-section structures with thick, multi-plate fabrications in high-stress areas.

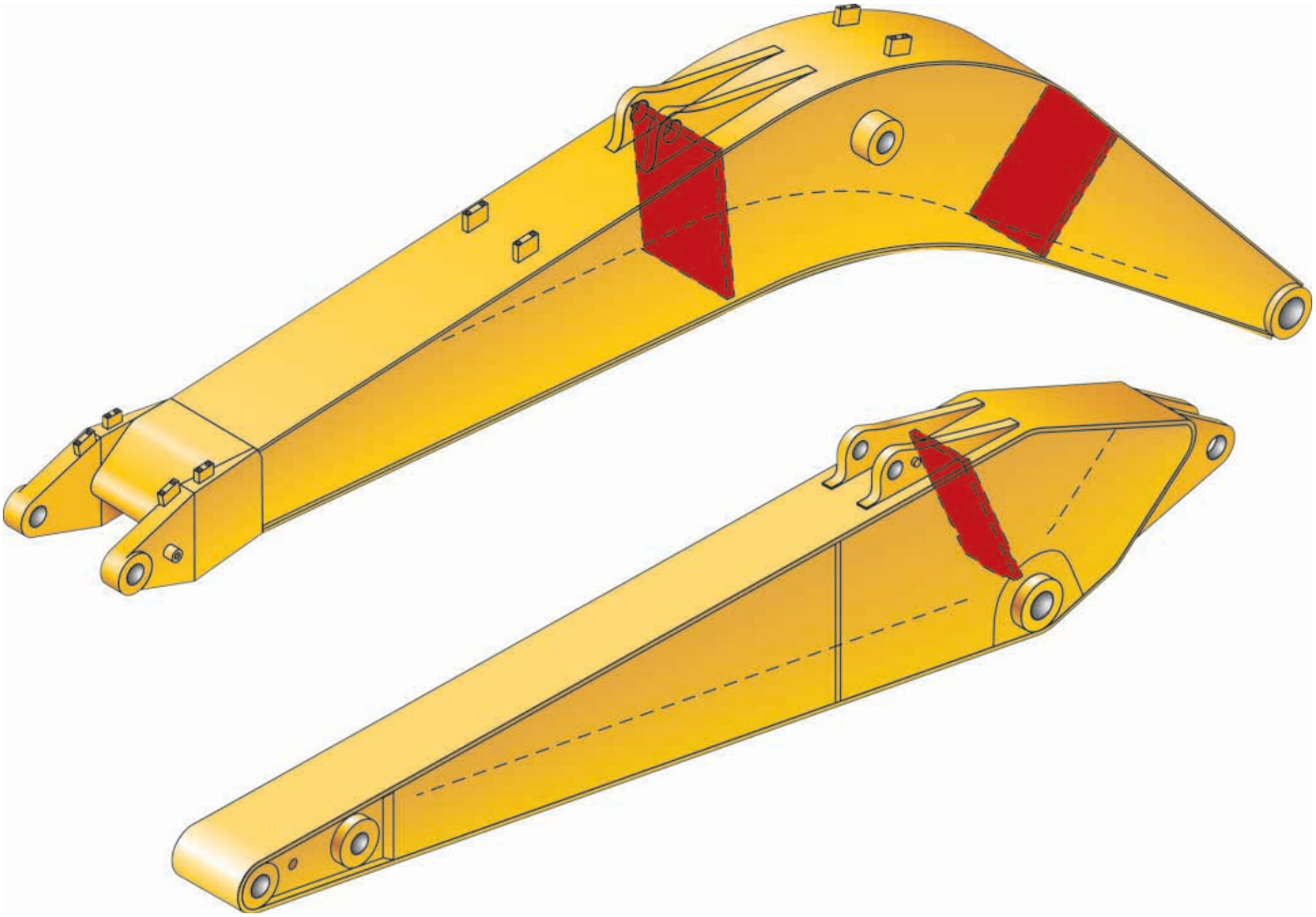

Reach Boom. The reach boom features an optimum design that maximizes digging envelopes with two stick choices.

Mass Excavation Boom. The mass excavation boom maximizes productivity. The mass version offers significantly higher digging forces and allows use of larger buckets.

R3.2D Stick. The R3.2D Stick provides the capacity for excellent reach and depth in trenching and general construction applications.

R3.9D Stick. Made of high-tensile strength steel and designed with the same application needs in mind as the R3.2D, with the added capability of increased reach and depth.

M2.55E Stick. The M2.55E Stick is suited to high-capacity and high-digging force buckets used in trenching, excavation, and other general construction work. It has been designed with reach and depth for good truck loading match.

JC Machinery SUNIGHT
excavatorhunter.com

Operator Station

Redesigned interior layout maximizes operator space and provides exceptional comfort.

Operator Station. The 330C L operator work station is quiet with ergonomic control placement and convenient adjustments, low lever and pedal effort, ergonomic seat design and highly efficient ventilation.

Redesigned Layout. Redesigned cab layout emphasizes simplicity and ease of use. Right-hand wall and console provide easy access to all switches, dials and controls.

Console. Redesigned consoles feature simplicity and functionality. Both consoles have attached adjustable armrests.

Automatic Climate Control. Fully automatic climate control adjusts temperature and flow and determines which air outlet is best in each situation.

Upper Cab Door Window. The upper cab door window slides open, providing extra ventilation and allowing communication with people outside.

Skylight. A large polycarbonate skylight delivers excellent natural lighting and good ventilation. Standard sliding sunshade protects the operator from direct sunlight.

Cab Attachments. A variety of cab attachments for additional functionality, comfort and security are available.

Windshield. The upper front windshield opens, closes and stores below the roof above the operator. Grips on the mid-lower part of the front windshield make opening easy.

Monitor. New, compact monitor enhances viewing while displaying a variety of easy to read and understand language-based information.

JC Machinery SUNIGHT
excavatorhunter.com

Work Tools – Attachments

Increased offerings of work tools help optimize machine performance.

Heavy-Duty Power Bucket

Heavy-Duty Power (HDP) Buckets. Designed to improve breakout force and machine cycle times, the Heavy Duty Power Bucket (HDP) compliments the General Purpose, Heavy Duty, and Heavy Duty Rock bucket lines.

General Purpose (GP) Buckets. General Purpose Buckets are best for digging in soft to hard ground with low to moderately abrasive materials.

Ditch Cleaning (DC) Buckets. These wide shallow buckets are best for bank forming, ditch cleaning, and finishing.

Heavy-Duty Rock (HDR) Buckets. Heavy-Duty Rock Buckets perform best when digging fragmented rock, frozen ground, caliche, and highly abrasive materials.

Heavy-Duty (HD) Buckets. Heavy-duty buckets are for digging in moderate to hard material and feature large ground engaging tools, thick cutting edges and thick bottom and side wear plates to improve performance in demanding conditions.

Pin Grabber Plus Coupler

Quick Couplers. The Pin Grabber Plus and the Dedicated Hydraulic Quick Coupler enhances machine versatility by enabling the rapid change over of a wide range of work tools in the field.

JC Machinery SUNIGHT
excavatorhunter.com

Monitor. With the optional tool control system, up to five different tool settings may be pre-programmed and selected from the electronic controller through the monitor.

Work Tools. Choose from a variety of work tools such as hammers, shears, compactors, thumbs, rotators, grapples or crushers. Ask your Cat dealer for information on attachments or special configurations.

Multi-processor

Hammer

Tool Control System. The optional tool control system maximizes work tool productivity by configuring hydraulic flow, pressure, and operator controls to match a specific work tool. System versatility enables a wide range of tools to be used. Factory installed combined function, hammer and thumb circuits are available as attachments.

Compactor

JC Machinery SUNIGHT
excavatorhunter.com

Serviceability

Simplified service and maintenance features save you time and money.

Extended Service Interval. 330C L service and maintenance intervals have been extended to reduce machine service time and increase machine availability.

Radiator Compartment. The left rear service door allows easy access to the engine radiator. A reserve tank and drain cock are attached to the radiator for simplified maintenance.

Air Filter Compartment. The air filter features a double-element construction for superior cleaning efficiency. When the air cleaner plugs, a warning is displayed on the monitor screen inside the cab.

Ground Level Service. The design and layout of the 330C L was made with the service technician in mind. Many service locations are easily accessible at ground level allowing critical maintenance to get done quickly and efficiently.

Pump Compartment. A service door on the right side of the upper structure allows ground-level access to the pump and pilot filter.

Capsule Filter. The hydraulic return filter, a capsule filter, is situated outside the hydraulic tank. This filter prevents contaminants from entering the system when hydraulic oil is changed and keeps the operation clean.

Diagnostics and Monitoring. The 330C L is equipped with S•O•S℠ sampling ports and hydraulic test ports for the hydraulic system, engine oil and for coolant. A test connection for the Electronic Technician (ET) service tool is located behind the cab.

Anti-Skid "Punched Star" Plate. Anti-skid punched-star plate covers top of storage box and upper structure to prevent slipping during maintenance. The plate can be removed for cleaning.

Fan Guard. Engine radiator fan is completely enclosed by fine wire mesh, reducing the risk of an accident.

Greasing Points. A concentrated remote greasing block on the boom delivers grease to hard-to-reach locations.

JC Machinery SUNIGHT
excavatorhunter.com

Complete Customer Support

Cat dealer services help you operate longer with lower costs.

Selection. Make detailed comparisons of the machines you are considering before you buy. What are the job requirements? What production is needed? What is the true cost of lost production? Your Cat dealer can give you precise answers to these questions.

Operation. Improving operating techniques can boost your profits. Your Cat dealer has training literature and other ideas to help you increase productivity.

Product Link Ready. The 330C L comes from the factory ready for easy Product Link installation.

Maintenance. Repair option programs guarantee the cost of repairs up front. Diagnostic programs such as Scheduled Oil Sampling and Technical Analysis help you avoid unscheduled repairs.

Replacement. Repair, rebuild or replace? Your Cat dealer can help you evaluate the cost involved so you can make the right choice.

Product Support. You will find nearly all parts at our dealer parts counter. Cat dealers utilize a worldwide computer network to find in-stock parts to minimize machine down time. Save money with remanufactured components.

JC Machinery SUNIGHT
excavatorhunter.com

Engine

Engine Model	CAT C9	
Flywheel Power	184 kW	247 hp
ISO 9249	184 kW	247 hp
SAE J1349	182 kW	244 hp
EEC 80/1269	184 kW	247 hp
Bore	112 mm	4.41 in
Stroke	149 mm	5.87 in
Displacement	8.8 L	537 in^3

Weights

Operating Weight – Long Undercarriage	35 100 kg	77,400 lb

- 6.5 m (21 ft 4 in) boom, 3.9 m (12 ft 10 in) stick, 1.4 m^3 (1.88 yd^3), 1246 mm (48 in) HDP bucket, and 850 mm (34 in) track shoe.

Service Refill Capacities

Fuel Tank Capacity	618 L	163 gal
Cooling System	38 L	10 gal
Engine Oil	36 L	9.4 gal
Swing Drive	19 L	5 gal
Final Drive (each)	15 L	4 gal
Hydraulic System (including tank)	410 L	108 gal
Hydraulic Tank	175 L	46 gal

Sound Performance

Performance	ANSI/SAE J1166

- Sound level of 74 dBA

Standards

Brakes	SAE J1026 APR90
Cab/FOGS	SAE J1356 FEB88 ISO 10262

Hydraulic System

Main Implement System – Maximum Flow (2x)	280 L/min	74 gal/min
Max. pressure – Implements (Full Time)	34 300 kPa	4,974 psi
Max. pressure – Travel	34 300 kPa	4,974 psi
Max. pressure – Swing	27 900 kPa	4,046 psi
Pilot System – Maximum flow	37 L/min	10 gal/min
Pilot System – Maximum pressure	4120 kPa	597 psi
Boom Cylinder – Bore	150 mm	5.91 in
Boom Cylinder – Stroke	1440 mm	57 in
Stick Cylinder – Bore	170 mm	6.69 in
Stick Cylinder – Stroke	1738 mm	68 in
D Family Bucket Cylinder – Bore	150 mm	5.91 in
D Family Bucket Cylinder – Stroke	1156 mm	46 in
E Family Bucket Cylinder – Bore	160 mm	6.3 in
E Family Bucket Cylinder – Stroke	1356 mm	53 in

Drive

Maximum Drawbar Pull	294 kN	66,094 lb
Maximum Travel Speed	5 kph	3.1 mph

Swing Mechanism

Swing Speed	10 rpm	
Swing Torque	108 kN•m	79,657 lb ft

Track

Standard w/Long Undercarriage – Triple Grouser	850 mm	34 in
Optional – Heavy Duty – Triple Grouser	850 mm	34 in
Optional – Triple Grouser	750 mm	30 in

JC Machinery SUNIGHT
excavatorhunter.com

Dimensions

All dimensions are approximate.

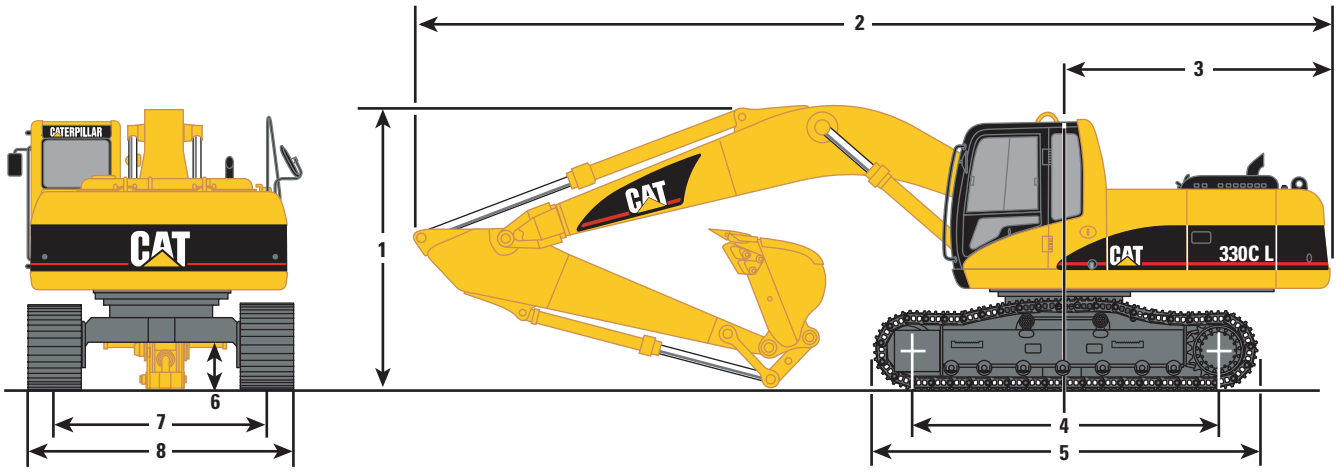

Boom Options	Reach — 6.5 m (21'4")	Reach — 6.5 m (21'4")	Mass — 6.18 m (20'3")
Stick Options	**R3.9D m (12'10")**	**R3.2D m (10'6")**	**M2.55E (8'4")**
1 Shipping height	3630 mm (11'11")	3350 mm (11'0")	3490 mm (11'5")
2 Shipping length	11 190 mm (36'9")	11 140 mm (36'7")	10 840 mm (35'7")
3 Tail swing radius	3500 mm (11'6")	3500 mm (11'6")	3500 mm (11'6")
4 Length to centers of rollers	4040 mm (13'3")	4040 mm (13'3")	4040 mm (13'3")
5 Track length	5020 mm (16'6")	5020 mm (16'6")	5020 mm (16'6")
6 Ground clearance	510 mm (1'8")	510 mm (1'8")	510 mm (1'8")
7 Track gauge	2590 mm (8'6")	2590 mm (8'6")	2590 mm (8'6")
8 Shipping width with 850 mm (34") Shoes	3440 mm (11'3")	3440 mm (11'3")	3440 mm (11'3")
Operating Weight			
750 mm (30") Shoes	34 382 kg (75,800 lb)	34 252 kg (75,513 lb)	34 462 kg (75,976 lb)
850 mm (34") Shoes	35 108 kg (77,400 lb)	34 978 kg (77,113 lb)	35 188 kg (77,576 lb)

* R3.9 shipping height increases to 3700 mm (12'2") with medium pressure and/or drain auxiliary lines.

JC Machinery SUNIGHT
excavatorhunter.com

Working Ranges

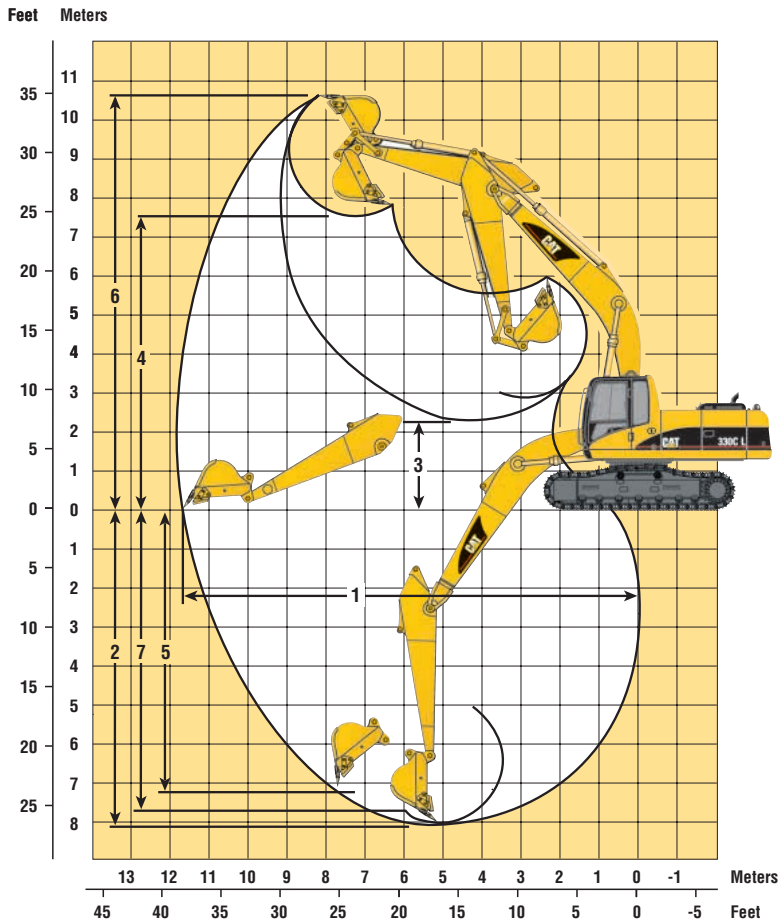

Major Component Weights

Booms: including lines, boom cylinders, stick cylinders and left side light

	kg	lb
Reach	3880	8550
Mass	3950	8700

Sticks: including bucket cylinder and bucket linkage

	kg	lb
R3.9 m	1950	4300
R3.2 m	1815	4000
M2.55 m	1960	4320

Counterweight	6020	13,300

		Reach Boom 6.5 m (21'4")	Reach Boom 6.5 m (21'4")	Mass Boom 6.18 m (20'3")
Stick Length		**R3.9 (12'10")**	**R3.2 (10'6")**	**M2.55E (8'4")**
Bucket		**1.4 m³ (1.8 yd³)**	**1.4 m³ (1.8 yd³)**	**2.2 m³ (3.0 yd³)**
1	Maximum Reach at Ground Level	11.64 m (38'2")	10.92 m (35'10")	10.21 m (33'6")
2	Maximum Digging Depth	8.09 m (26'7")	7.39 m (24'3")	6.60 m (21'8")
3	Minimum Loading Height	2.01 m (6'7")	2.71 m (8'11")	2.97 m (9'9")
4	Maximum Loading Height	7.64 m (25'1")	7.20 m (23'7")	6.67 m (21'11")
5	Maximum Vertical Wall Digging Depth	7.35 m (24'1")	6.49 m (21'4")	5.85 m (19'2")
6	Maximum Cutting Height	10.81 m (35'6")	10.34 m (33'11")	10.17 m (33'4")
7	Maximum Depth Cut for 2440 mm (8') Level Bottom	7.74 m (25'5")	7.04 m (23'1")	6.19 m (20'4")

JC Machinery SUNIGHT
excavatorhunter.com

330C L Bucket Options and Specifications

	Capacity*		Width		Tip Radius		Weight		Teeth	Reach 6.5 m (21'4")		Mass 6.18 m (20'3")
	m³	yd³	mm	in	mm	in	kg	lb	Qty	R3.9D (12'10")	R3.2D (10'6")	M2.55E (8'4")
D-Buckets												
General Purpose Buckets (GP)	0.80	1.12	775	30	1854	73.0	980	2161	3	●	●	—
	1.10	1.50	925	36	1854	73.0	1057	2331	3	●	●	—
	1.40	1.88	1098	42	1854	73.0	1162	2562	5	●	●	—
	1.70	2.25	1246	48	1854	73.0	1192	2628	5	◓	●	—
	1.90	2.50	1400	55	1854	73.0	1237	2729	5	◒	◓	—
	2.20	3.00	1540	60	1854	73.0	1455	3209	6	○	◒	—
Heavy Duty Buckets (HD)	0.70	1.00	775	30	1764	69.0	1016	2241	3	●	●	—
	0.90	1.25	925	36	1764	69.0	1119	2468	3	●	●	—
	1.20	1.50	1098	42	1764	69.0	1244	2744	4	●	●	—
	1.40	1.88	1246	48	1764	69.0	1380	3043	5	●	●	—
	1.60	2.12	1400	55	1764	69.0	1480	3264	5	◓	●	—
	1.80	2.50	1540	60	1764	69.0	1593	3512	6	◒	◓	—
	2.00	2.75	1695	66	1764	69.0	1680	3704	6	○	◒	—
	2.20	3.00	1820	72	1764	69.0	1728	3810	7	∴	◒	—
Heavy Duty Rock Buckets (HDR)	0.70	1.00	775	30	1764	69.0	1137	2507	3	●	●	—
	0.90	1.25	925	36	1764	69.0	1243	2741	3	●	●	—
	1.20	1.50	1098	42	1764	69.0	1385	3054	4	●	●	—
	1.40	1.88	1246	48	1764	69.0	1539	3394	5	◓	●	—
	1.60	2.12	1400	55	1764	69.0	1642	3620	5	◒	●	—
Heavy Duty Power Buckets (HDP)	1.00	1.25	925	36	1660	65.3	1059	2335	3	●	●	—
	1.40	1.88	1246	48	1660	65.3	1311	2891	5	●	●	—
	1.60	2.12	1400	54	1660	65.3	1397	3082	5	◓	●	—
	1.80	2.50	1540	60	1660	65.3	1517	3345	6	◒	◓	—
Ditch Cleaning Buckets (DC)	1.70	2.25	1676	66	1424	56.0	1189	2622		◓	●	—
	1.80	2.50	1829	72	1424	56.0	1236	2726		◒	◓	—
E-Buckets												
Heavy Duty Buckets (HD)	2.20	3.00	1676	66	1867	73.5	2211	4876	6	—	—	◒
	2.70	3.50	1829	72	1867	73.5	2346	5172	7	—	—	○

Assumptions for maximum material density rating:
1. Front linkage fully extended at ground line
2. Bucket curled
3. 100% bucket fill factor

* Capacities based on SAE J296. Some calculations of capacity fall on borderlines. Rounding may allow two buckets to have the same English rating, but different metric ratings.

● 2100 kg/m³ (3500 lbs/yd³)
◓ 1800 kg/m³ (3000 lbs/yd³)
◒ 1500 kg/m³ (2500 lbs/yd³)
○ 1200 kg/m³ (2000 lbs/yd³)
∴ 900 kg/m³ (1500 lbs/yd³)
— Not Available

JC Machinery SUNIGHT
excavatorhunter.com

Bucket and Stick Forces

D-Family Buckets		
Power Buckets		
Stick	**R3.9D (12'10")**	**R3.2D (10'6")**
Bucket Digging Force (ISO)	226 kN (50,800 lb)	225 kN (50,500 lb)
Bucket Digging Force (SAE)	200 kN (45,000 lb)	199 kN (44,700 lb)
Stick Digging Force (ISO)	144 kN (32,300 lb)	166 kN (37,300 lb)
Stick Digging Force (SAE)	140 kN (31,500 lb)	161 kN (36,300 lb)
HD and HDR Buckets		
Bucket Digging Force (ISO)	204 kN (45,900 lb)	203 kN (45,600 lb)
Bucket Digging Force (SAE)	181 kN (40,600 lb)	180 kN (40,400 lb)
Stick Digging Force (ISO)	142 kN (31,800 lb)	163 kN (36,700 lb)
Stick Digging Force (SAE)	138 kN (30,900 lb)	158 kN (35,600 lb)
General Purpose Buckets		
Bucket Digging Force (ISO)	186 kN (41,800 lb)	185 kN (41,600 lb)
Bucket Digging Force (SAE)	170 kN (38,100 lb)	169 kN (37,900 lb)
Stick Digging Force (ISO)	137 kN (30,900 lb)	158 kN (35,400 lb)
Stick Digging Force (SAE)	134 kN (30,100 lb)	154 kN (34,500 lb)

E-Family Buckets	
HD Buckets	
Stick	**M2.55E (8'4")**
Bucket Digging Force (ISO)	265 kN (59,500 lb)
Bucket Digging Force (SAE)	237 kN (53,100 lb)
Stick Digging Force (ISO)	186 kN (41,700 lb)
Stick Digging Force (SAE)	179 kN (40,200 lb)

JC Machinery SUNIGHT
excavatorhunter.com

Reach Boom Lift Capacities

Load Point Height | Load Radius Over Front | Load Radius Over Side | Load at Maximum Reach

R3.9D STICK – 3900 mm (12'10")
BUCKET – D 36" HD

SHOES – 850 mm (34") triple grouser

BOOM – 6500 mm (21'4")

		1.5 m (5.0 ft)		3.0 m (10.0 ft)		4.5 m (15.0 ft)		6.0 m (20.0 ft)		7.5 m (25.0 ft)		9.0 m (30.0 ft)				
																m ft
9.0 m **30.0 ft**	kg **lb**													*3100 ***6900**	*3100 ***6900**	9.21 **29.79**
7.5 m **25.0 ft**	kg **lb**													*2950 ***6450**	*2950 ***6450**	10.27 **33.47**
6.0 m **20.0 ft**	kg **lb**									*6050 ***13,250**	*6050 ***13,250**	*5900 ***12,900**	4750 **10,150**	*2900 ***6300**	*2900 ***6300**	10.97 **35.88**
4.5 m **15.0 ft**	kg **lb**									*6800 ***14,700**	6450 **13,850**	*6300 ***13,700**	4600 **9800**	*2900 ***6400**	*2900 ***6400**	11.38 **37.30**
3.0 m **10.0 ft**	kg **lb**					*12 350 ***26,550**	*12 350 ***26,550**	*9300 ***20,000**	8850 **19,050**	*7700 ***16,650**	6150 **13,150**	*6800 ***14,750**	4450 **9450**	*3050 ***6650**	2800 **6200**	11.54 **37.87**
1.5 m **5.0 ft**	kg **lb**					*15 300 ***32,950**	12 750 **27,450**	*10 850 ***23,450**	8250 **17,700**	*8600 ***18,650**	5800 **12,450**	7200 **15,400**	4250 **9100**	*3250 ***7100**	2800 **6100**	11.47 **37.63**
Ground Line	kg **lb**			*6850 ***15,600**	*6850 ***15,600**	*17 000 ***36,700**	12 000 **25,800**	*12 050 ***26,000**	7800 **16,700**	*9350 **20,200**	5500 **11,850**	7000 **15,050**	4100 **8750**	*3550 ***7850**	2900 **6350**	11.15 **36.59**
–1.5 m **–5.0 ft**	kg **lb**	*6700 ***14,900**	*6700 ***14,900**	*10 550 ***23,900**	*10 550 ***23,900**	*17 450 ***37,700**	11 700 **25,100**	*12 550 ***27,200**	7500 **16,150**	9200 **19,800**	5350 **11,500**	6900 **14,850**	4000 **8600**	*4100 ***9000**	3150 **6950**	10.57 **34.64**
–3.0 m **–10.0 ft**	kg **lb**	*10 900 ***24,400**	*10 900 ***24,400**	*15 450 ***35,000**	*15 450 ***35,000**	*16 850 ***36,450**	11 650 **25,050**	*12 400 ***26,800**	7450 **16,000**	9150 **19,650**	5300 **11,400**	6950 **15,250**	4000 **8850**	*4900 ***10,900**	3700 **8200**	9.67 **31.62**
–4.5 m **–15.0 ft**	kg **lb**	*15 900 ***35,800**	*15 900 ***35,800**	*21 650 ***46,700**	*21 650 ***46,700**	*15 200 ***32,750**	11 900 **25,550**	*11 300 ***24,300**	7550 **16,250**	*8450 ***17,900**	5400 **11,650**			*6100 ***13,400**	4800 **10,800**	8.34 **27.10**
–6.0 m **–20.0 ft**	kg **lb**			*16 600 ***35,150**	*16 600 ***35,150**	*11 950 ***25,250**	*11 950 ***25,250**	*8550 ***17,600**	7900 **17,100**					*7350 ***16,100**	7050 **16,050**	6.50 **20.92**

* Limited by hydraulic capacity rather than tipping load. The above loads are in compliance with SAE hydraulic excavator lift capacity rating standard J1097. They do not exceed 87% of hydraulic lifting capacity or 75% of tipping capacity. Weight of all lifting accessories must be deducted from the above lifting capacities.

R3.2D STICK – 3200 mm (10'6")
BUCKET – D 36" HD

SHOES – 850 mm (34") triple grouser

BOOM – 6500 mm (21'4")

		1.5 m (5.0 ft)		3.0 m (10.0 ft)		4.5 m (15.0 ft)		6.0 m (20.0 ft)		7.5 m (25.0 ft)		9.0 m (30.0 ft)				
																m ft
9.0 m	kg													*4000	*4000	8.26
7.5 m **25.0 ft**	kg **lb**									*6400 ***14,000**	*6400 ***14,000**			*3750 ***8250**	*3750 ***8250**	9.46 **30.77**
6.0 m **20.0 ft**	kg **lb**									*6850 ***14,950**	6550 **14,000**			*3700 ***8150**	*3700 ***8150**	10.22 **33.41**
4.5 m **15.0 ft**	kg **lb**							*8600 ***18,650**	*8600 ***18,650**	*7500 ***16,300**	6350 **13,550**	*6900 ***15,050**	4500 **9650**	*3750 ***8250**	3400 **7500**	10.67 **34.95**
3.0 m **10.0 ft**	kg **lb**					*13 950 ***29,950**	13 450 **29,000**	*10 200 ***21,950**	8650 **18,550**	*8350 ***18,050**	6050 **12,950**	*7300 ***15,700**	4400 **9350**	*3950 ***8650**	3200 **7050**	10.84 **35.55**
1.5 m **5.0 ft**	kg **lb**					*16 450 ***35,450**	12 350 **26,650**	*11 600 ***25,050**	8100 **17,400**	*9150 ***19,750**	5750 **12,300**	7150 **15,350**	4250 **9050**	*4250 ***9300**	3150 **6950**	10.75 **35.29**
Ground Line	kg **lb**			***14,100**	***14,100**	*17 450 ***37,750**	11 850 **25,500**	*12 450 ***26,950**	7700 **16,600**	9400 **20,150**	5500 **11,850**	7050 **15,100**	4150 **8850**	*4700 ***10,300**	3300 **7250**	10.41 **34.15**
–1.5 m **–5.0 ft**	kg **lb**	*8050 ***17,900**	*8050 ***17,900**	*11 800 ***26,650**	*11 800 ***26,650**	*17 300 ***37,500**	11 700 **25,150**	*12 700 ***27,450**	7550 **16,200**	9250 **19,900**	5400 **11,600**	7000 **15,400**	4100 **9000**	*5400 ***11,950**	3650 **8050**	9.78 **32.03**
–3.0 m **–10.0 ft**	kg **lb**	*13 500 ***30,200**	*13 500 ***30,200**	*18 400 ***41,650**	*18 400 ***41,650**	*16 250 ***35,100**	11 850 **25,400**	*12 150 ***26,150**	7550 **16,250**	9300 ***19,900**	5400 **11,650**			*6650 ***14,750**	4400 **9800**	8.78 **28.67**
–4.5 m **–15.0 ft**	kg **lb**			*19 100 ***41,100**	*19 100 ***41,100**	*13 950 ***30,000**	12 150 **26,100**	*10 450 ***22,250**	7750 **16,700**					*4600 ***9750**	*4600 ***9750**	7.25 **23.47**

* Limited by hydraulic capacity rather than tipping load. The above loads are in compliance with SAE hydraulic excavator lift capacity rating standard J1097. They do not exceed 87% of hydraulic lifting capacity or 75% of tipping capacity. Weight of all lifting accessories must be deducted from the above lifting capacities.

JC Machinery SUNIGHT
excavatorhunter.com

Mass Boom Lift Capacities

Load Point Height | Load Radius Over Front | Load Radius Over Side | Load at Maximum Reach

M2.55E STICK – 2550 mm (8'4")
BUCKET – E 42" GP

SHOES – 850 mm (34") triple grouser

BOOM – 6180 mm (20'3")

		3.0 m (10.0 ft)		4.5 m (15.0 ft)		6.0 m (20.0 ft)		7.5 m (25.0 ft)				
												m ft
7.5 m **25.0 ft**	kg **lb**									*3700 ***8150**	*3700 ***8150**	8.67 **28.15**
6.0 m **20.0 ft**	kg **lb**					*7850 ***17,000**	*7850 ***17,000**	*7150 ***15,500**	6050 **12,950**	*3600 ***7900**	*3600 ***7900**	9.51 **31.08**
4.5 m **15.0 ft**	kg **lb**			*11 450 ***24,500**	*11 450 ***24,500**	*9000 ***19,400**	8700 **18,700**	*7700 ***16,750**	5800 **12,350**	*3650 ***8000**	3400 **7500**	9.99 **32.72**
3.0 m **10.0 ft**	kg **lb**			*14 400 ***30,850**	12 900 **27,750**	*10 350 ***22,400**	8150 **17,500**	*8400 ***18,200**	5500 **11,850**	*3850 ***8400**	3150 **6950**	10.16 **33.32**
1.5 m **5.0 ft**	kg **lb**			*16 450 ***35,400**	11 850 **25,450**	*11 550 ***24,950**	7650 **16,400**	*9050 ***19,550**	5300 **11,300**	*4150 ***9100**	3150 **6900**	10.04 **32.96**
Ground Line	kg **lb**			*17 000 ***36,750**	11 400 **24,450**	*12 200 ***26,350**	7300 **15,650**	9000 **19,300**	5100 **10,950**	*4650 ***10,250**	3350 **7400**	9.63 **31.60**
–1.5 m **–5.0 ft**	kg **lb**	*14 300 ***32,450**	*14 300 ***32,450**	*16 400 ***35,550**	11 350 **24,350**	*12 050 ***26,050**	7200 **15,400**	8950 **19,150**	5050 **10,800**	*5500 ***12,150**	3900 **8650**	8.88 **29.09**
–3.0 m **–10.0 ft**	kg **lb**	*20 050 ***43,450**	*20 050 ***43,450**	*14 750 ***31,850**	11 550 **24,850**	*10 950 ***23,500**	7300 **15,650**			*6100 ***13,350**	5200 **11,550**	7.67 **25.01**
–4.5 m **–15.0 ft**	kg **lb**	*15 200 ***32,450**	*15 200 ***32,450**	*11 400 ***24,150**	*11 400 ***24,150**					*7750 ***16,950**	*7750 ***16,950**	5.97 **19.31**

* Limited by hydraulic capacity rather than tipping load. The above loads are in compliance with SAE hydraulic excavator lift capacity rating standard J1097. They do not exceed 87% of hydraulic lifting capacity or 75% of tipping capacity. Weight of all lifting accessories must be deducted from the above lifting capacities.

JC Machinery SUNIGHT
excavatorhunter.com

Standard Equipment

Standard and optional equipment may vary. Consult your Caterpillar dealer for specifics.

Operator Environment
- Bolt-on FOGS Capability
- Cab
  - Ashtray with Lighter
  - Beverage Holder
  - Bi-level Air Conditioner
    - with Auto Climate Control and Defroster
  - Coat Hook
  - Floor Mat, Washable
  - Hydraulic Neutralizer Lever for All Controls
  - Joystick Type Controls, Pilot Operated
  - Language Display Monitor with Gauges
    - Warning Messages
    - Filter/Fluid Change Information
    - Start-up Fluid Level Check for:
      - Hydraulic Oil
      - Engine Oil and Coolant
    - Working Hour Information
    - Machine Condition
    - Error Code and Tool Mode Setting Information
    - Full Time Clock
  - Light, Interior
  - Literature Holder
  - Pop-up Skylight, Polycarbonate with Sunshade
  - Positive Filtered Ventilation
  - Pressurized Cab
  - Radio Ready Cab
    - Pre-wired Mounting Areas
    - Speakers
    - 24V to 12V Converter
    - Antenna
  - Rear Window, Emergency Exit
  - Removable Lower Window with in-cab storage bracket
  - Retractable Front Windshield with Assist Device
  - Seat, Suspension Type
    - Four-way Adjustable
    - Adjustable Armrests — 95 mm (3.74 in) wide
    - Retractable Seat Belt — 76 mm (3.0 in) wide
  - Sliding Upper Door Window
  - Storage Compartment
  - Travel Control Pedals with Removable Hand Levers
    - Capability to install two additional pedals
  - Windshield Wiper with Washer, Pillar Mounted Upper
  - Windshield Split by 7:3, Front

Electrical
- Alternator, 70A
- Boom Lights, Right and Left Side
- Horn, Signaling/Warning
- Working Light, Frame Mounted
- Two Cab Mounted Lights

Power Train
- Cat C9 Diesel Engine
  - Air Intake Heater
  - Air-to-air Aftercooling (ATAAC)
  - 24V Electric Starting
  - HEUI™ Fuel System
  - Tier II Emissions Package
- 2300 m (7500 ft) Altitude Capability
- Automatic Engine Speed Control
  - One Touch Low Idle
- Cooling
  - Protection of 43° C to –18° C at 50% Concentration
- Straight Line Travel
- Two Speed Auto-shift Travel
- Two 2-Micron Fuel Filters
- Water Separator in fuel line

Undercarriage
- Hydraulic Track Adjusters
- Idler and Center Section Track Guiding Guards
- Towing Eye on Base Frame
- Track-type Undercarriage with Grease Lubricated Seals
  - 850 mm (34 in) Triple Grouser Shoes

Other Standard Equipment
- Adopt Cat data link with capability of using Cat ET
- Automatic Swing Parking Brake
- Automatic Work Modes
- Auxiliary Hydraulic Valve (one)
- Boom Drift Reducing Valve
- Boom Lowering Device for Backup
- Capability of Stackable Valve for Main Valve
  - (Maximum of Three Valves)
- Capability of Auxiliary Circuit
  - (Aux. Pump and Valves)
- Capability of Boom and Stick Lowering Control Device
- Capability of Bio using Hydraulic Oil System
- Counterweight with Lifting Eyes 6020 kg (13,300 lb)
- Door Locks and Caps Locks with One-key Security System
- Fine Swing Control
- Mirrors (Frame-right, Cab-left)
- Product Link Ready
- Regeneration Circuit for Boom and Stick
- Reverse Swing Damping Valve
- Steel Wall between Engine and Pump Compartment
- Stick Drift Reducing Valve
- Wave Fin Radiator

JC Machinery SUNIGHT
excavatorhunter.com

Optional Equipment

Standard and optional equipment may vary. Consult your Caterpillar dealer for specifics.

Mandatory in Certain Countries
- Cab with Tempered Windows
  - Front Windshield, Laminated
- Monitor with Asian Language, Including:
  - English
  - Indonesian
  - Chinese
  - Thai
  - Japanese

Electrical
- Power Supply, 12V-10A
  - 2 Sockets
- Travel Alarm

Hydraulic
- Auxiliary Hydraulic Lines for Booms and Sticks
- Pump Flow Controls
- 3 Auxiliary Hydraulic Arrangement Options
  - (*Including Boom and Stick Lines)
  - Hammer Circuit
  - Thumb Circuit
  - Combined Circuit

Operator Environment
- Bolt-on FOGS
- Cab
  - Fan
  - Hand Control Pattern Changer
  - Rain Protector, Cab Front
  - Seat
    - High Back
    - High Back and Seat Heater
    - Headrest
  - Storage Compartment with Lid
  - Straight Travel Third Pedal
  - Sun Visor, Windshield
  - Windshield Wiper with Washer, Lower

Power Train
- Cooling System
  - High Ambient Cooling Package (up to 52° C)
- Starting Aid
  - Cold Weather (down to –32° C)
- Water Separator Level Indicator

Undercarriage
- Sprocket Guiding Guard
- Track Guiding Guard, Full Length
- Track Options
  - 750 mm (30 in) Triple Grouser Shoes
  - 850 mm (34 in) Heavy Duty Triple Grouser

Other Optional Equipment
- Air Prefilter
- Buckets
  - Sidecutters and tips
- Bucket Linkage
  - D-family – Reach
  - E-family – Mass
- Drive for Auxiliary Pump
- Guards
  - Bottom, Heavy Duty
  - Cab Top
  - Upper and Lower Front Windshield
  - Vandalism Protection
- Rubber Bumpers
- Stick and Boom Combinations:
  - Reach Boom 6.5 m (21 ft 4 in)
    - R3.9D 3900 mm (12 ft 10 in)
    - R3.2D 3200 mm (10 ft 6 in)
  - Mass Boom 6.18 m (20 ft 3 in)
    - M2.55E 2550 mm (8 ft 4 in)

JC Machinery SUNIGHT
excavatorhunter.com

Notes

JC Machinery SUNIGHT
excavatorhunter.com

Notes

JC Machinery SUNIGHT
excavatorhunter.com

Notes

JC Machinery SUNIGHT
excavatorhunter.com

330C L Hydraulic Excavator

For more complete information on Cat products, dealer services, and industry solutions, visit us on the web at **www.CAT.com**

© 2003 Caterpillar
Printed in U.S.A.

AEHQ5463-01 (9-03)

NACD, CACo (Replaces AEHQ5463)

Materials and specifications are subject to change without notice. Featured machines in photos may include additional equipment. See your Caterpillar dealer for available options.

JC Machinery SUNIGHT
excavatorhunter.com

CATERPILLAR®